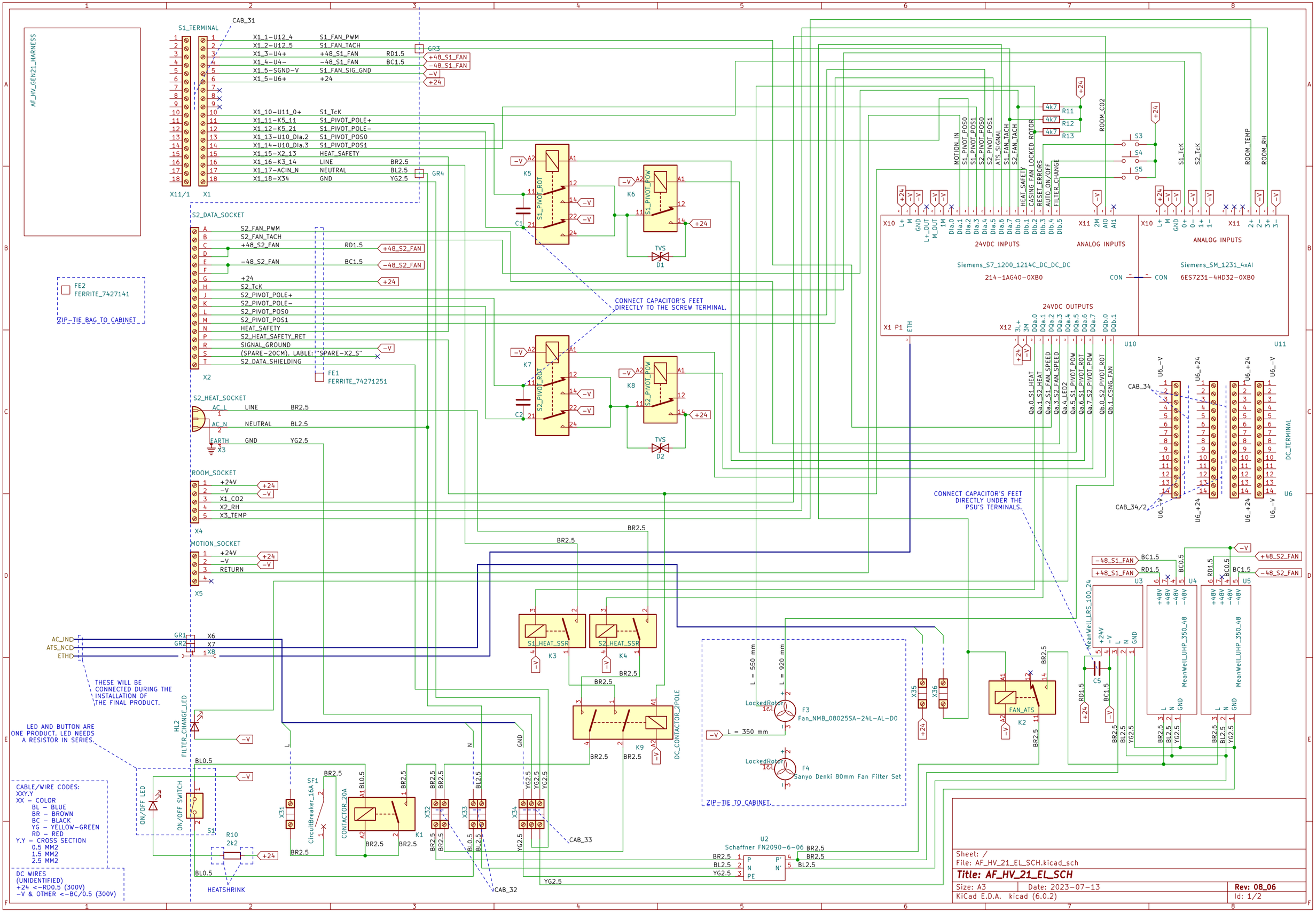
AF_HV_GEN21_HARNESS
S1_TERMINAL
CAB_31
X1_1-U12_4 S1_FAN_PWM
X1_2-U12_5 S1_FAN_TACH
X1_3-U4+ +48_S1_FAN RD1.5
X1_4-U4- -48_S1_FAN BC1.5
X1_5-SGND-V S1_FAN_SIG_GND
X1_5-U6+ +24
X1_10-U11_0+ S1_TcK
X1_11-K5_11 S1_PIVOT_POLE+
X1_12-K5_21 S1_PIVOT_POLE-
X1_13-U10_DIa.2 S1_PIVOT_POS0
X1_14-U10_DIa.3 S1_PIVOT_POS1
X1_15-X2_13 HEAT_SAFETY
X1_16-K3_14 LINE BR2.5
X1_17-ACIN_N NEUTRAL BL2.5
X1_18-X34 GND YG2.5
GR3
GR4
X11/1 X1
S2_DATA_SOCKET
S2_FAN_PWM
S2_FAN_TACH
+48_S2_FAN RD1.5
-48_S2_FAN BC1.5
+24
S2_TcK
S2_PIVOT_POLE+
S2_PIVOT_POLE-
S2_PIVOT_POS0
S2_PIVOT_POS1
HEAT_SAFETY
S2_HEAT_SAFETY_RET
SIGNAL_GROUND
(SPARE-20CM). LABLE: "SPARE-X2_S"
S2_DATA_SHIELDING
X2
FE1
FERRITE_74271251
FE2
FERRITE_7427141
ZIP-TIE BAG TO CABINET
S2_HEAT_SOCKET
AC_L LINE BR2.5
AC_N NEUTRAL BL2.5
EARTH GND YG2.5
X3
ROOM_SOCKET
+24V
-V
X1_CO2
X2_RH
X3_TEMP
X4
MOTION_SOCKET
+24V
-V
RETURN
X5
AC_IN
ATS_NC
ETH
GR1 X6
GR2 X7
X8
THESE WILL BE CONNECTED DURING THE INSTALLATION OF THE FINAL PRODUCT.
LED AND BUTTON ARE ONE PRODUCT. LED NEEDS A RESISTOR IN SERIES.
HL2
FILTER_CHANGE_LED
ON/OFF LED
ON/OFF SWITCH
S1
R10
2k2
HEATSHRINK
CABLE/WIRE CODES:
XXY.Y
XX - COLOR
BL - BLUE
BR - BROWN
BC - BLACK
YG - YELLOW-GREEN
RD - RED
Y.Y - CROSS SECTION
0.5 MM2
1.5 MM2
2.5 MM2
DC WIRES
(UNIDENTIFIED)
+24 <-RD0.5 (300V)
-V & OTHER <-BC/0.5 (300V)
SF1
CircuitBreaker_16A
CONTACTOR_20A
K1
X31
X32
X33
X34
CAB_33
CAB_32
K5
K6
K7
K8
S1_PIVOT_ROT
S1_PIVOT_POW
S2_PIVOT_ROT
S2_PIVOT_POW
C1
C2
TVS
D1
D2
CONNECT CAPACITOR'S FEET DIRECTLY TO THE SCREW TERMINAL.
S1_HEAT_SSR
S2_HEAT_SSR
K3
K4
K9
DC_CONTACTOR_2POLE
L = 550 mm
L = 920 mm
L = 350 mm
LockedRotor
F3
Fan_NMB_08025SA-24L-AL-D0
F4
Sanyo Denki 80mm Fan Filter Set
ZIP-TIE TO CABINET.
X35
X36
FAN_ATS
K2
U2
Schaffner FN2090-6-06
CONNECT CAPACITOR'S FEET DIRECTLY UNDER THE PSU'S TERMINALS.
R11
R12
R13
4k7
ROOM_CO2
S3
S4
S5
S1_TcK
S2_TcK
ROOM_TEMP
ROOM_RH
MOTION_IN
S1_PIVOT_POS0
S1_PIVOT_POS1
S2_PIVOT_POS0
S2_PIVOT_POS1
ATS_SIGNAL
S1_FAN_TACH
S2_FAN_TACH
HEAT_SAFETY
CASING_FAN_LOCKED_ROTOR
RESET_ERRORS
AUTO_ON/OFF
FILTER_CHANGE
X10
X11
24VDC INPUTS
ANALOG INPUTS
Siemens_S7_1200_1214C_DC_DC_DC
214-1AG40-0XB0
Siemens_SM_1231_4xAI
6ES7231-4HD32-0XB0
CON
X1 P1 ETH
X12
24VDC OUTPUTS
U10
U11
Qa.0_S1_HEAT
Qa.1_S2_HEAT
Qa.2_S1_FAN_SPEED
Qa.3_S2_FAN_SPEED
Qa.4_LED2
Qa.5_S1_PIVOT_POW
Qa.6_S1_PIVOT_ROT
Qa.7_S2_PIVOT_POW
Qb.0_S2_PIVOT_ROT
Qb.1_CSNG_FAN
CAB_34
CAB_34/2
U6_-V
U6_+24
U6
DC_TERMINAL
-48_S1_FAN BC1.5
+48_S1_FAN RD1.5
+48_S2_FAN
-48_S2_FAN
U3
U4
U5
MeanWell_LRS_100_24
MeanWell_UHP_350_48
C5
Sheet: /
File: AF_HV_21_EL_SCH.kicad_sch
Title: AF_HV_21_EL_SCH
Size: A3
Date: 2023-07-13
Rev: 08_06
KiCad E.D.A. kicad (6.0.2)
Id: 1/2

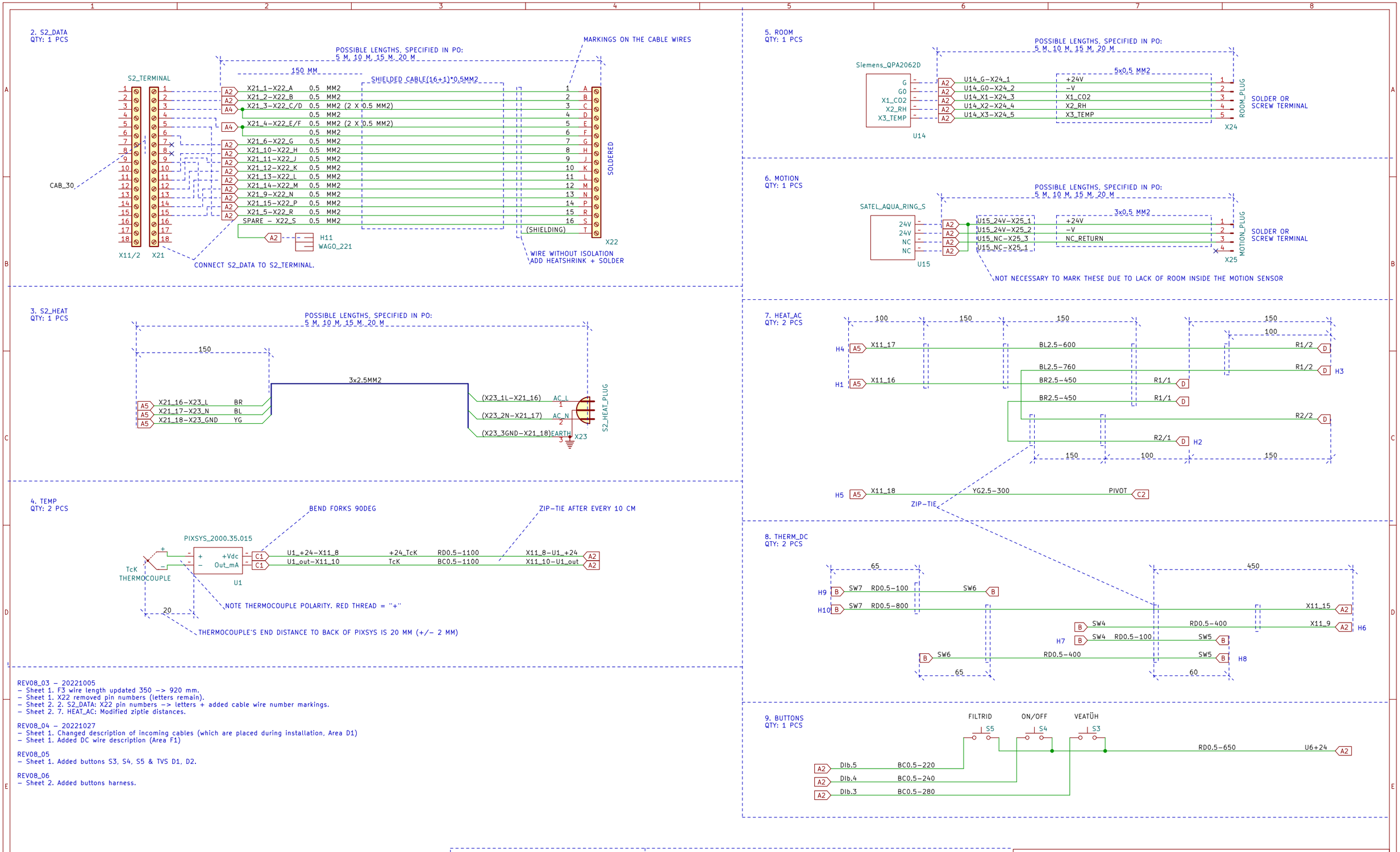

REV08_03 - 20221005
- Sheet 1. F3 wire length updated 350 -> 920 mm.
- Sheet 1. X22 removed pin numbers (letters remain).
- Sheet 2. 2. S2_DATA: X22 pin numbers -> letters + added cable wire number markings.
- Sheet 2. 7. HEAT_AC: Modified ziptie distances.

REV08_04 - 20221027
- Sheet 1. Changed description of incoming cables (which are placed during installation, Area D1)
- Sheet 1. Added DC wire description (Area F1)

REV08_05
- Sheet 1. Added buttons S3, S4, S5 & TVS D1, D2.

REV08_06
- Sheet 2. Added buttons harness.

CABLE/WIRE CODES:
XXY.Y-ZZZZ
XX - COLOR
BL - BLUE
BR - BROWN
BC - BLACK
YG - YELLOW-GREEN
Y.Y - CROSS SECTION
0.5 MM2
2.5 MM2
ZZZ - CABLE/WIRE LENGTH
100 MM

A1 FERRULE, 6 MM x 0.5 MM2 (Siemens)
A2 FERRULE, 8 MM x 0.5 MM2
A3 FERRULE, 8 MM x 0.75 MM2
A4 FERRULE, 8 MM x 2 x 0.5 MM2
A5 FERRULE, 10 MM x 2.5 MM2

B FEMALE TERMINAL, 0.8x6.4MM
C1 FORK TERMINAL, M4, 1.5MM2
C2 FORK TERMINAL, M4, 2.5MM2
D ROUND TERMINAL, M4, 2.5MM2

Sheet: /AF_HV_GEN21_HARNESS/
File: AF_HV_GEN21_HARNESS.kicad_sch

Title: AF_HV_21_EL_SCH

Size: A3	Date: 2023-07-13	Rev: 08_06
KiCad E.D.A. kicad (6.0.2)		Id: 2/2

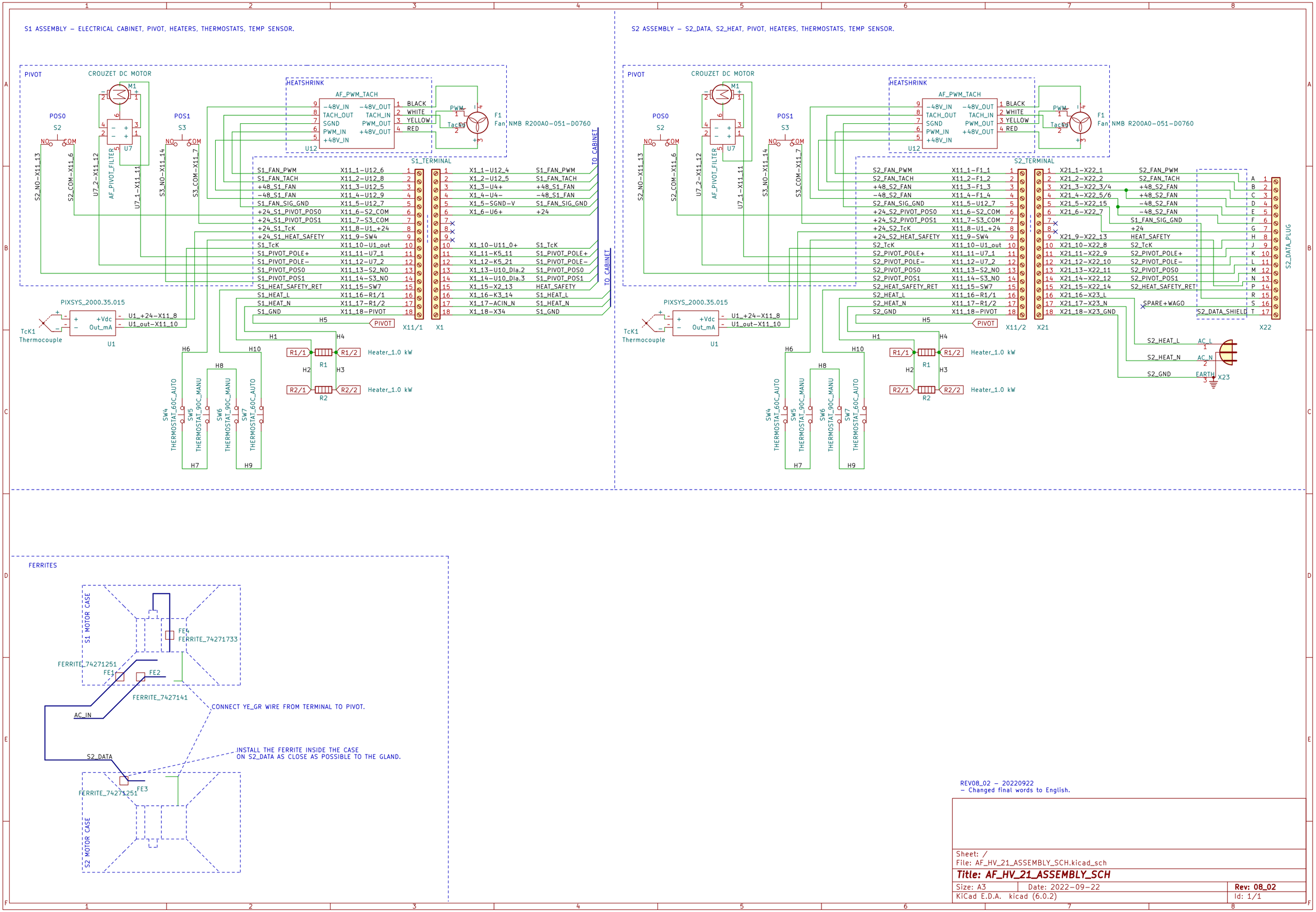

REV08_02 – 20220922
– Changed final words to English.

Sheet: /
File: AF_HV_21_ASSEMBLY_SCH.kicad_sch

Title: AF_HV_21_ASSEMBLY_SCH

Size: A3	Date: 2022-09-22	Rev: 08_02
KiCad E.D.A. kicad (6.0.2)		Id: 1/1